ILLUMINATOR DATA

LT3WRH200-00-1-B-24V

Lighting Dimension

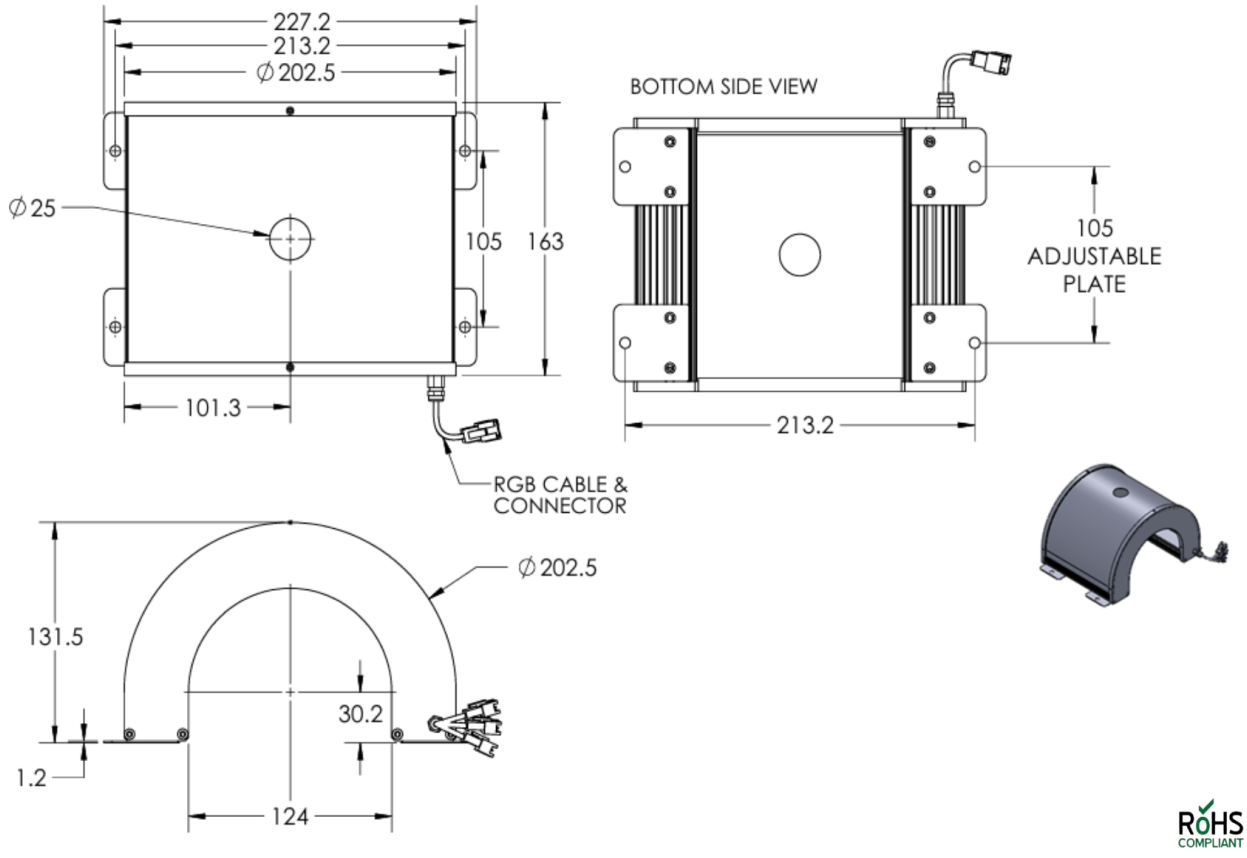

Mechanical Information	
Casing Material	Extrusion, Aluminium
Storage Temperature Range	0 - 45°C
Storage Humidity Range	20 - 85%
Weight	1112g
Width / Inner Diameter	163mm
Length / Outer Diameter	227.2mm
Height / Thickness	131.5mm

ILLUMINATOR DATA

LT3WRH200-00-1-B-24V

Lighting Information			
LED Color	BLUE		
Wavelength	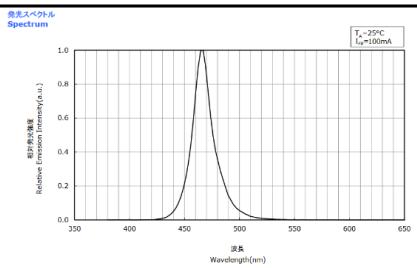 464 nm - 476 nm		
Working Distance	40mm	50mm	60mm
Intensity (±15%)	0lx	0lx	0lx
Illumination (Number of Row)	2		
Illumination Active Area	Active Outer Diameter	147	
	Active Inner Diameter	126	
Emission Angle	0°		
Eye Safety Class (IEC62471)	EXEMPT Products with sources, which do not pose any potential photobiological hazard even for the continuous and unrestricted exposure. Example: 8 hours of exposure poses no acute hazard to either eye or skin, and 10,000 seconds (2.8 hours) of the intent starting causes no blue light retinal hazard.		
Chromaticity Table For White Colour Only	Color Rank		

	Rank W					
x	0.137	0.124	0.110	0.132	0.142	0.151
y	0.037	0.058	0.087	0.112	0.081	0.058

* Ranking at T_S=25°C.
* Forward Voltage Tolerance: ±0.05V
* Luminous Flux Tolerance: ±10%
* Chromaticity Coordinate Tolerance: ±0.01
* LEDs from the above ranks will be shipped.
  The rank combination ratio per shipment will be decided by Nichia.

Electrical Information	
Rated Voltage	$24V_{(Min)}$ - $24V_{(Max)}$
Rated Current	400mA
Power Consumption	9.600W
Casing Temperature, After 60 minutes operation	60°C

Strobe Mode Specification		
*Normal Strobe Voltage	24V	
*Normal Strobe Current	400mA	
Overdrive Voltage Range	Min: 36V	Max: 48V
Overdrive Current Range	Min: 1045mA	Max: 1690mA
Recommended Overdrive Voltage	36V	
**Max. Trigger Pulse Duration	10%	
**Max. Duty Cycle	10msec	

*Normal strobe means the lighting is operated using the rated power. Overdrive means the power supplied to the lighting exceeded the rated power.

**Overdrive condition must not exceed the max. trigger pulse duration and max. duty cycle.

ILLUMINATOR DATA

LT3WRH200-00-1-B-24V

Connection Information			
Connector Type	JST SMR-03V-B		
Cable Length	500mm		
Pin Configuration	**Pin**	**Signal**	**Cable Color**
	1	24V	RED
	2	-	-
	3	GND	WHITE / BLACK
	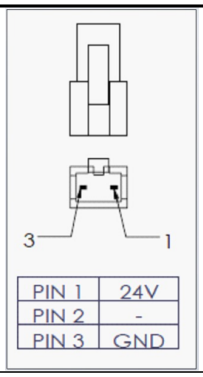		

Additional Information	
Additional Cooling Method	Attached to machine part for better heat dissipation
Intensity Controller Selection	LTIC series
CE Conformity	YES
RoHS Compliance	YES

Application	
Illumination Type	Indirect Tunnel Illumination
Application Use	• Inspection of Cracks,Chips,Stains and Marks on Cylindrical Surfaces • Shafts Inspection 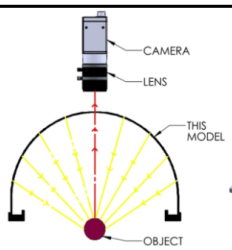 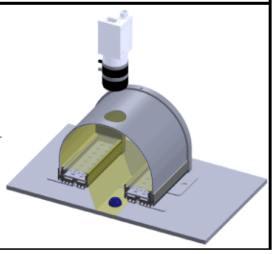

ILLUMINATOR DATA

LT3WRH200-00-1-B-24V

Lighting Pattern				
Working Distance	For further details, please contact us			
Display and Image	For further details, please contact us			
Data Results	Horizontal	Meas. (mm)	Vertical	Meas. (mm)
	90%	N.A.	90%	N.A.
	90%	N.A.	90%	N.A.
	80%	N.A.	80%	N.A.
	70%	N.A.	70%	N.A.
	60%	N.A.	60%	N.A.
	50%	N.A.	50%	N.A.
	40%	N.A.	40%	N.A.
	30%	N.A.	30%	N.A.
	20%	N.A.	20%	N.A.
	10%	N.A.	10%	N.A.